THIS DOCUMENT CONTAINS PROPRIETARY INFORMATION WHICH IS THE PROPERTY OF QSC AUDIO PRODUCTS, THAT MAY NOT BE DISCLOSED, REPRODUCED OR USED WITHOUT EXPRESS WRITTEN CONSENT FROM QSC AUDIO PRODUCTS.

REV	DESCRIPTION	EFF. DATE	CHK	APPROVED DATE
A	Production release per ECO xxxx	00/00/00		

RAVE 's-24' SERIES ANALOG MODELS COMBINED

Analog Inputs 0-1 qscaCai0.sch SHT 14	Analog Outputs 0-1 qscaCao0.sch SHT 3	Input Multiplexer # 0 qscaCmux.sch SHT 18	Digital Processing Unit qscaCdpu.sch SHT 6	Output capacitors qscaCcp0.sch SHT 34
Analog Inputs 2-3 qscaCai1.sch SHT 15	Analog Outputs 2-3 qscaCao1.sch SHT 11	Input Mux #2 and #3 qscaCmi2.sch SHT 9	100BASE-TX MAC Layer qscaCmac.sch SHT 5	Output capacitors qscaCcp1.sch SHT 34
Analog Inputs 4-5 qscaCai2.sch SHT 2	Analog Outputs 4-5 qscaCao2.sch SHT 31	Output P/S #1 & Relay VR qscaCmo1.sch SHT 26	100BASE-TX PHY Layer qscaCphy.sch SHT 4	Output capacitors qscaCcp8.sch SHT 34
Analog Inputs 6-7 qscaCai3.sch SHT 13	Analog Outputs 6-7 qscaCao3.sch SHT 12	Output P/S #2 and #3 qscaCmo2.sch SHT 27	Clock and Logic qscaCclk.sch SHT 8	
Analog Inputs 8-9 qscaCai4.sch SHT 21	Analog Outputs 8-9 qscaCao4.sch SHT 23	Relay Control IC #0 qscaCre0.sch SHT 28	Analog I/O Signal Drivers qscaCalg.sch SHT 17	Phase Locked Loop Circuit qscaCpll.sch SHT 35
Analog Inputs 10-11 qscaCai5.sch SHT 22	Analog Outputs 10-11 qscaCao5.sch SHT 30	Mechanical parts - non BOM qscaCmec.sch SHT 29	LED and Relay Control Logic qscaCled.sch SHT 16	
Analog Inputs 12-13 qscaCai6.sch SHT 19	Analog Outputs 12-13 qscaCao6.sch SHT 25	Connectors qscaCcon.sch SHT 7	Analog Voltage +Regulators qscaCvrp.sch SHT 33	
Analog Inputs 14-15 qscaCai7.sch SHT 20	Analog Outputs 14-15 qscaCao7.sch SHT 24	Analog Voltage Regulator -A qscaCvr2.sch SHT 32	VCXO Control DAC qscaCdac.sch SHT 10	

RAVE 160s-24
USE THE FOLLOWING SHEETS

SHT 3	SHT 11	SHT 27
SHT 4	SHT 12	SHT 28
SHT 5	SHT 16	SHT 29
SHT 6	SHT 17	SHT 30
SHT 7	SHT 23	SHT 31
SHT 8	SHT 24	SHT 33
SHT 10	SHT 25	SHT 34 qscaCcp0.sch
	SHT 26	SHT 35

RAVE 161s-24
USE THE FOLLOWING SHEETS

SHT 2	SHT 10	SHT 20
SHT 4	SHT 13	SHT 21
SHT 5	SHT 14	SHT 22
SHT 6	SHT 15	SHT 29
SHT 7	SHT 16	SHT 32
SHT 8	SHT 17	SHT 33
SHT 9	SHT 18	SHT 34 qscaCcp1.sch
	SHT 19	SHT 35

RAVE 188s-24
USE THE FOLLOWING SHEETS

SHT 2	SHT 13	SHT 25
SHT 4	SHT 14	SHT 26
SHT 5	SHT 15	SHT 29
SHT 6	SHT 16	SHT 30
SHT 7	SHT 17	SHT 32
SHT 8	SHT 18	SHT 33
SHT 10	SHT 23	SHT 34 qscaCcp8.sch
	SHT 24	SHT 35

QSC AUDIO PRODUCTS, INC.
1675 MACARTHUR BLVD.
COSTA MESA, CA 92626

Title: **RAVE Analog Block Diagram**

Size: B | Number: **SH-000864-00** | Rev **A**

File: C:\DATA\SCH\RAVE\Analog\Working\Rave_beta2\864Aall\864A_all.DDB - Documents\864rAblk.sch

Date: 11-Jan-2002 | Eng: DARRYL HOCH | Sheet 1 of 35

THIS DOCUMENT CONTAINS PROPRIETARY INFORMATION WHICH IS THE PROPERTY OF QSC AUDIO PRODUCTS, THAT MAY NOT BE DISCLOSED, REPRODUCED OR USED WITHOUT EXPRESS WRITTEN CONSENT FROM QSC AUDIO PRODUCTS.

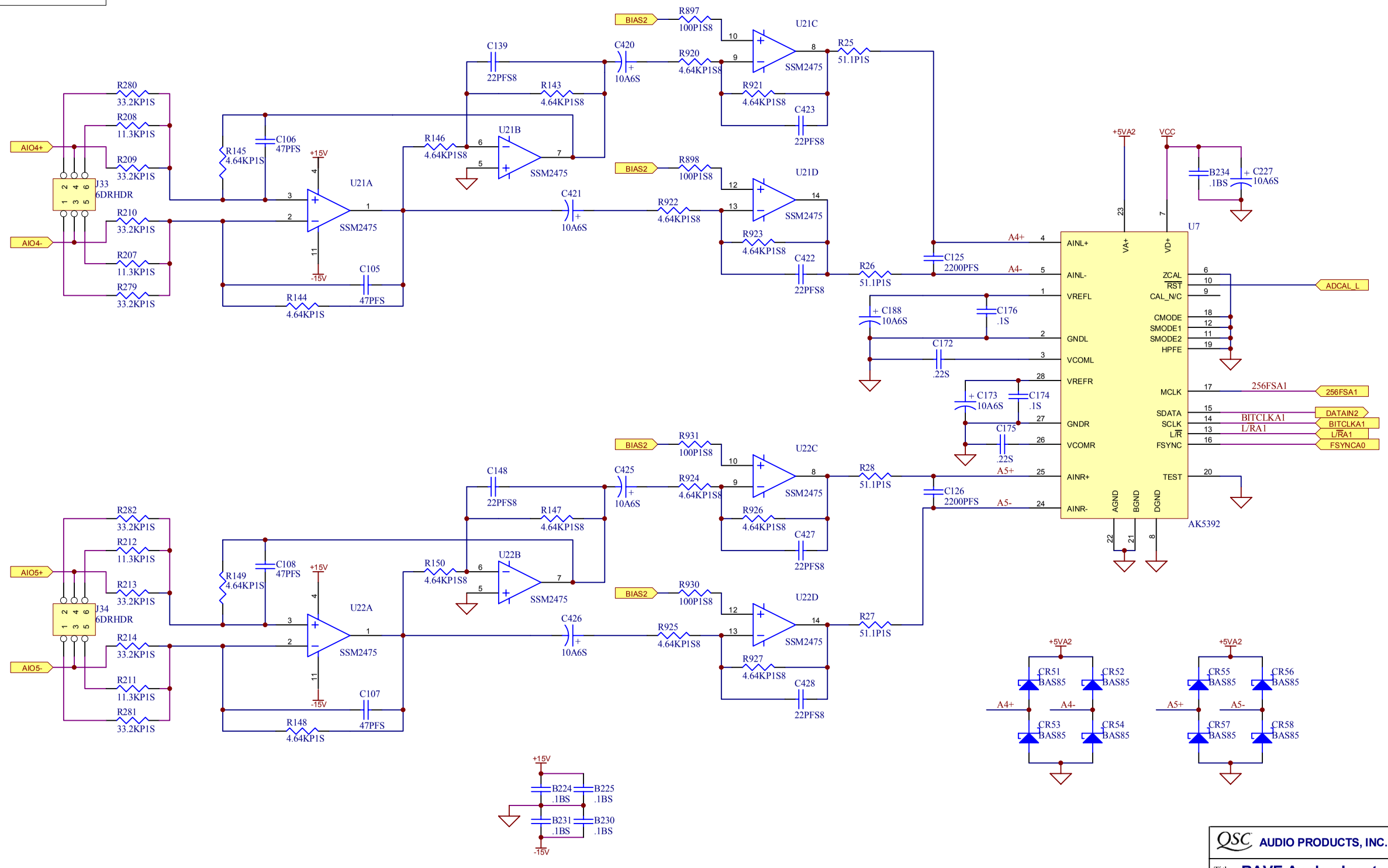

QSC AUDIO PRODUCTS, INC.
1675 MACARTHUR BLVD.
COSTA MESA, CA 92626

Title: **RAVE Analog Inputs # 4-5**

Size: B | Number: **SH-000864-00** | Rev **A**

File: C:\DATA\SCH\RAVE\Analog\Working\Rave_beta2\864Aall\864A_all.DDB - Documents\qscaCai2.sch

Date: 11-Jan-2002 | Eng: DARRYL HOCH | Sheet 2 of 35

THIS DOCUMENT CONTAINS PROPRIETARY INFORMATION WHICH IS THE PROPERTY OF QSC AUDIO PRODUCTS, THAT MAY NOT BE DISCLOSED, REPRODUCED OR USED WITHOUT EXPRESS WRITTEN CONSENT FROM QSC AUDIO PRODUCTS.

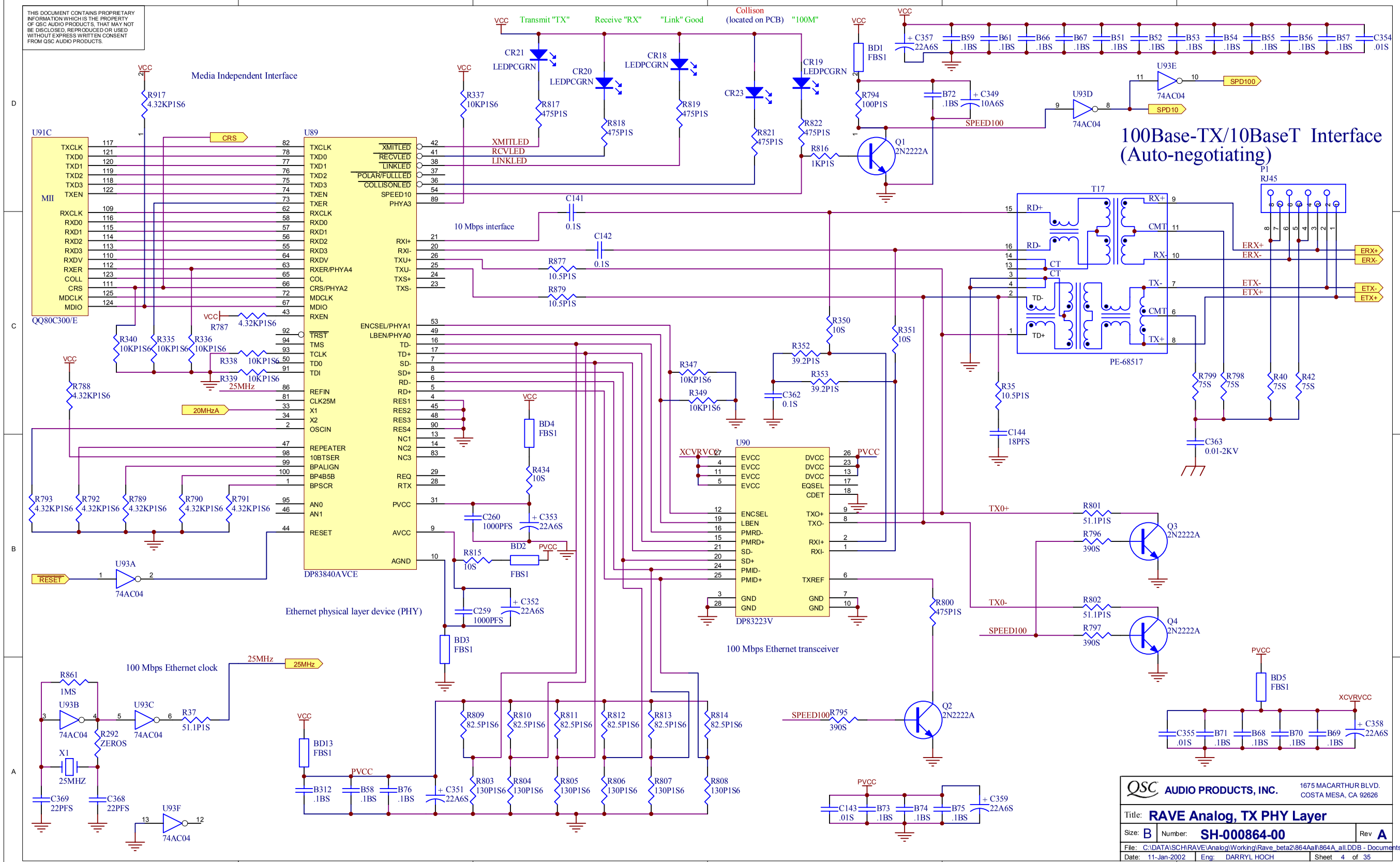

QSC AUDIO PRODUCTS, INC.
1675 MACARTHUR BLVD.
COSTA MESA, CA 92626

Title: **RAVE Analog, TX PHY Layer**

Size: B | Number: **SH-000864-00** | Rev **A**

File: C:\DATA\SCH\RAVE\Analog\Working\Rave_beta2\864Aall\864A_all.DDB - Documents\qscaCphy.sch

Date: 11-Jan-2002 | Eng: DARRYL HOCH | Sheet 4 of 35

THIS DOCUMENT CONTAINS PROPRIETARY INFORMATION WHICH IS THE PROPERTY OF QSC AUDIO PRODUCTS, THAT MAY NOT BE DISCLOSED, REPRODUCED OR USED WITHOUT EXPRESS WRITTEN CONSENT FROM QSC AUDIO PRODUCTS.

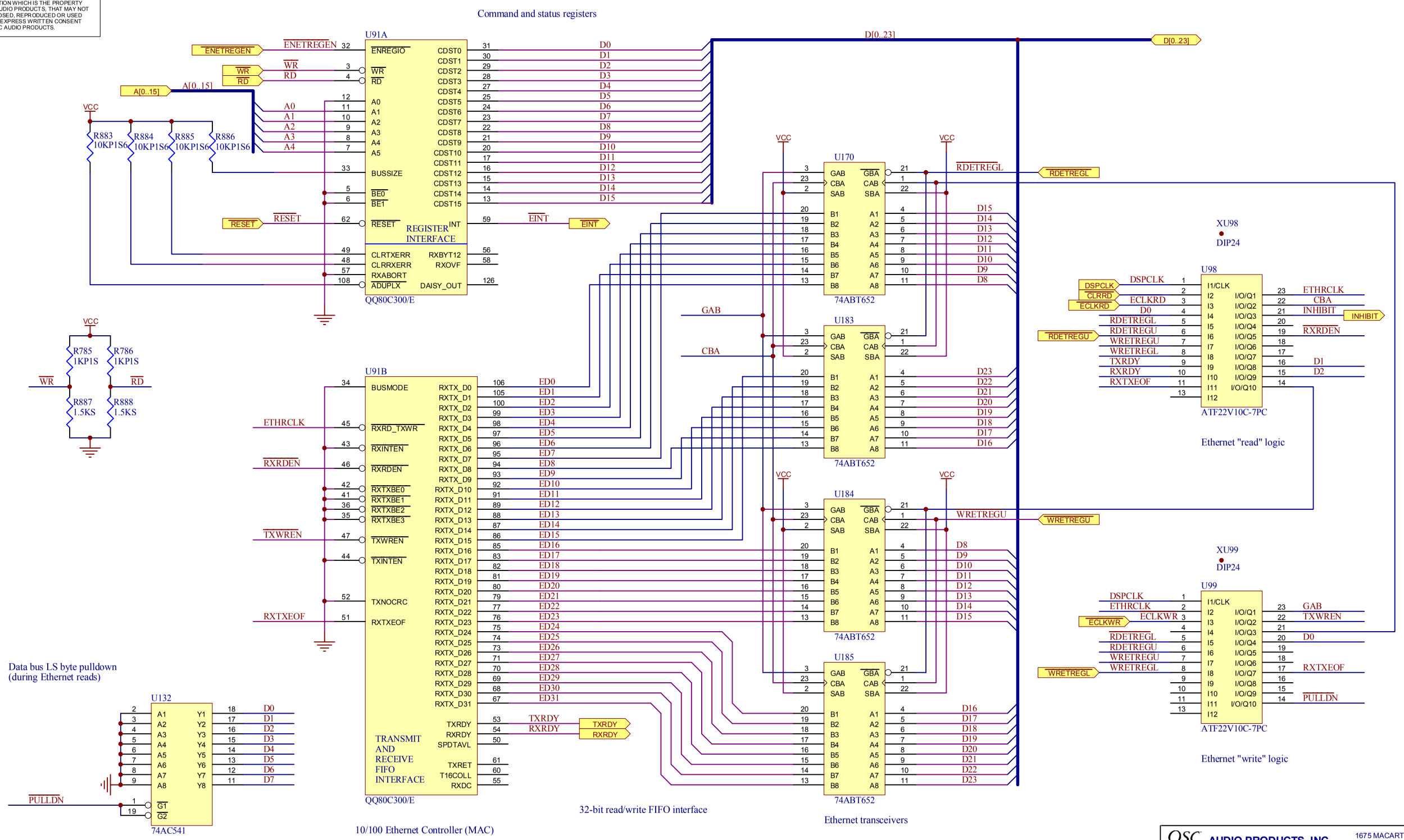

QSC AUDIO PRODUCTS, INC.
1675 MACARTHUR BLVD.
COSTA MESA, CA 92626

Title: RAVE Analog, 100Base-TX MAC

Size: B | Number: SH-000864-00 | Rev

File: C:\DATA\SCH\RAVE\Analog\Working\Rave_beta2\864Aall\864A_all.DDB - Documents\qscaCmac.sch

Date: 11-Jan-2002 | Eng: DARRYL HOCH | Sheet 5 of 35

THIS DOCUMENT CONTAINS PROPRIETARY INFORMATION WHICH IS THE PROPERTY OF QSC AUDIO PRODUCTS, THAT MAY NOT BE DISCLOSED, REPRODUCED OR USED WITHOUT EXPRESS WRITTEN CONSENT FROM QSC AUDIO PRODUCTS.

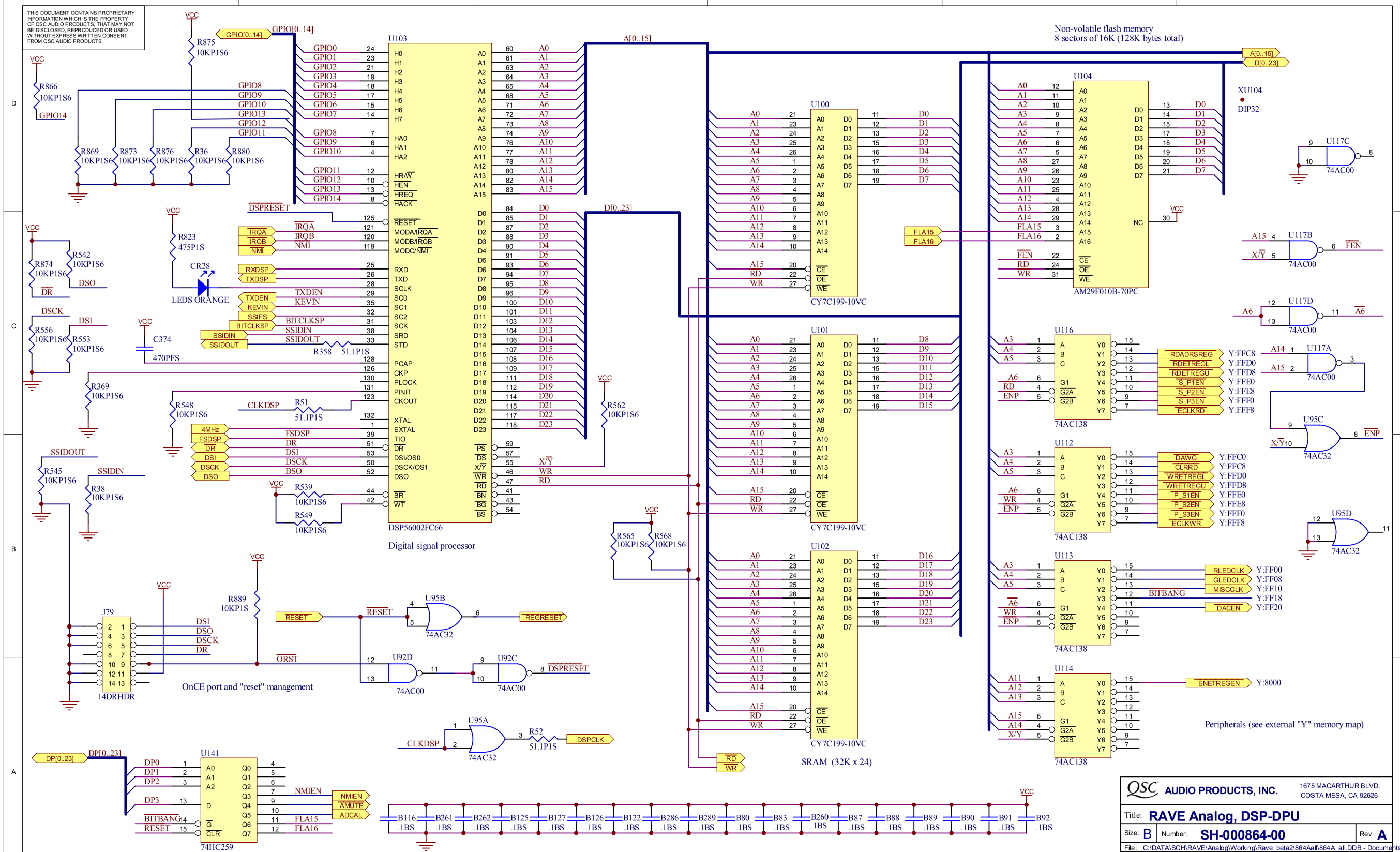

QSC AUDIO PRODUCTS, INC.
1675 MACARTHUR BLVD.
COSTA MESA, CA 92626

Title: **RAVE Analog, DSP-DPU**

Size: B | Number: **SH-000864-00** | Rev **A**

File: C:\DATA\SCH\RAVE\Analog\Working\Rave_beta2\864Aall\864A_all.DDB - Documents\qscaCdpu.sch

Date: 11-Jan-2002 | Eng: DARRYL HOCH | Sheet 6 of 35

THIS DOCUMENT CONTAINS PROPRIETARY INFORMATION WHICH IS THE PROPERTY OF QSC AUDIO PRODUCTS, THAT MAY NOT BE DISCLOSED, REPRODUCED OR USED WITHOUT EXPRESS WRITTEN CONSENT FROM QSC AUDIO PRODUCTS.

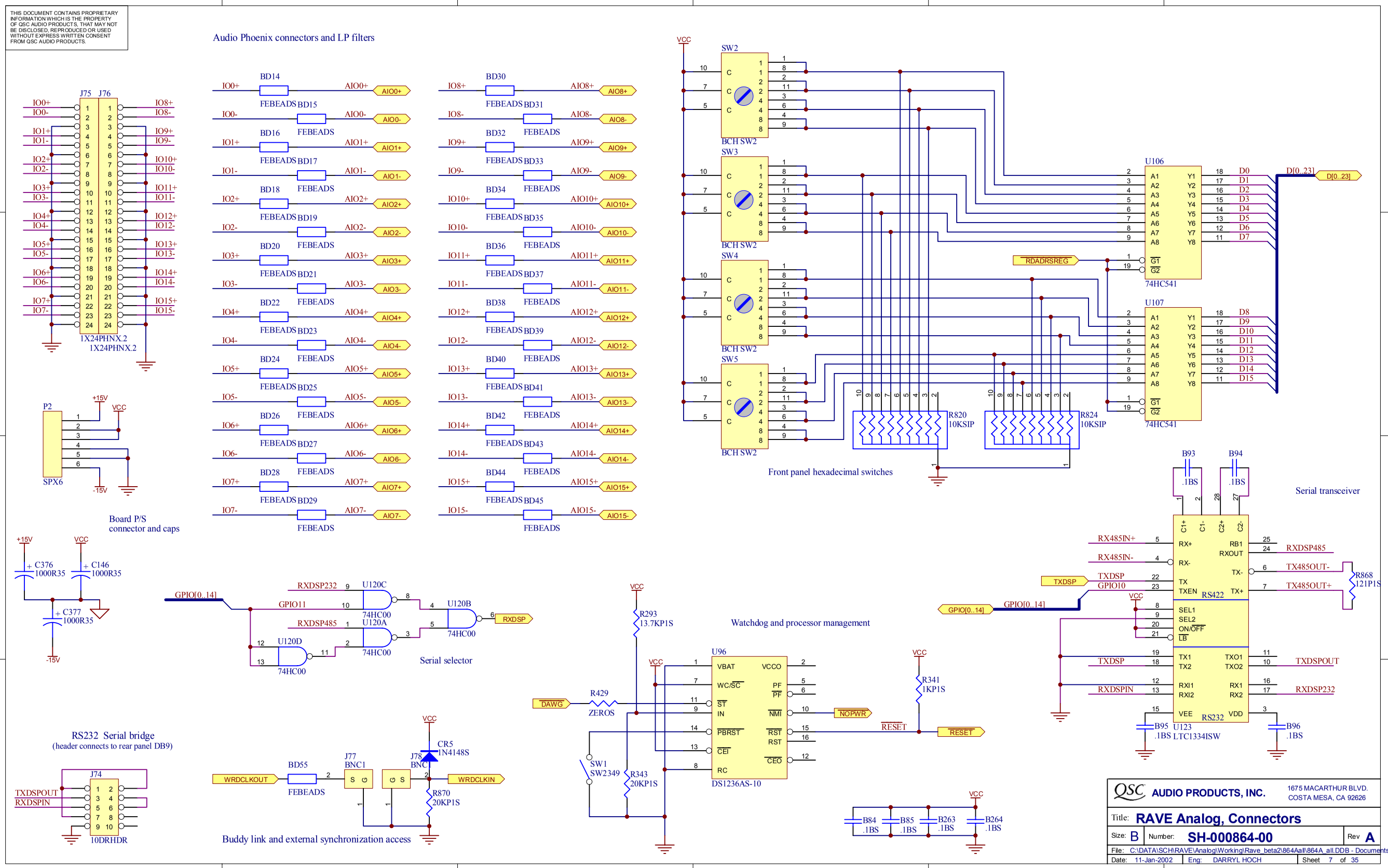

QSC AUDIO PRODUCTS, INC.
1675 MACARTHUR BLVD.
COSTA MESA, CA 92626

Title: **RAVE Analog, Connectors**

Size: B | Number: **SH-000864-00** | Rev **A**

File: C:\DATA\SCH\RAVE\Analog\Working\Rave_beta2\864Aall\864A_all.DDB - Documents\qscaCcon.sch

Date: 11-Jan-2002 | Eng: DARRYL HOCH | Sheet 7 of 35

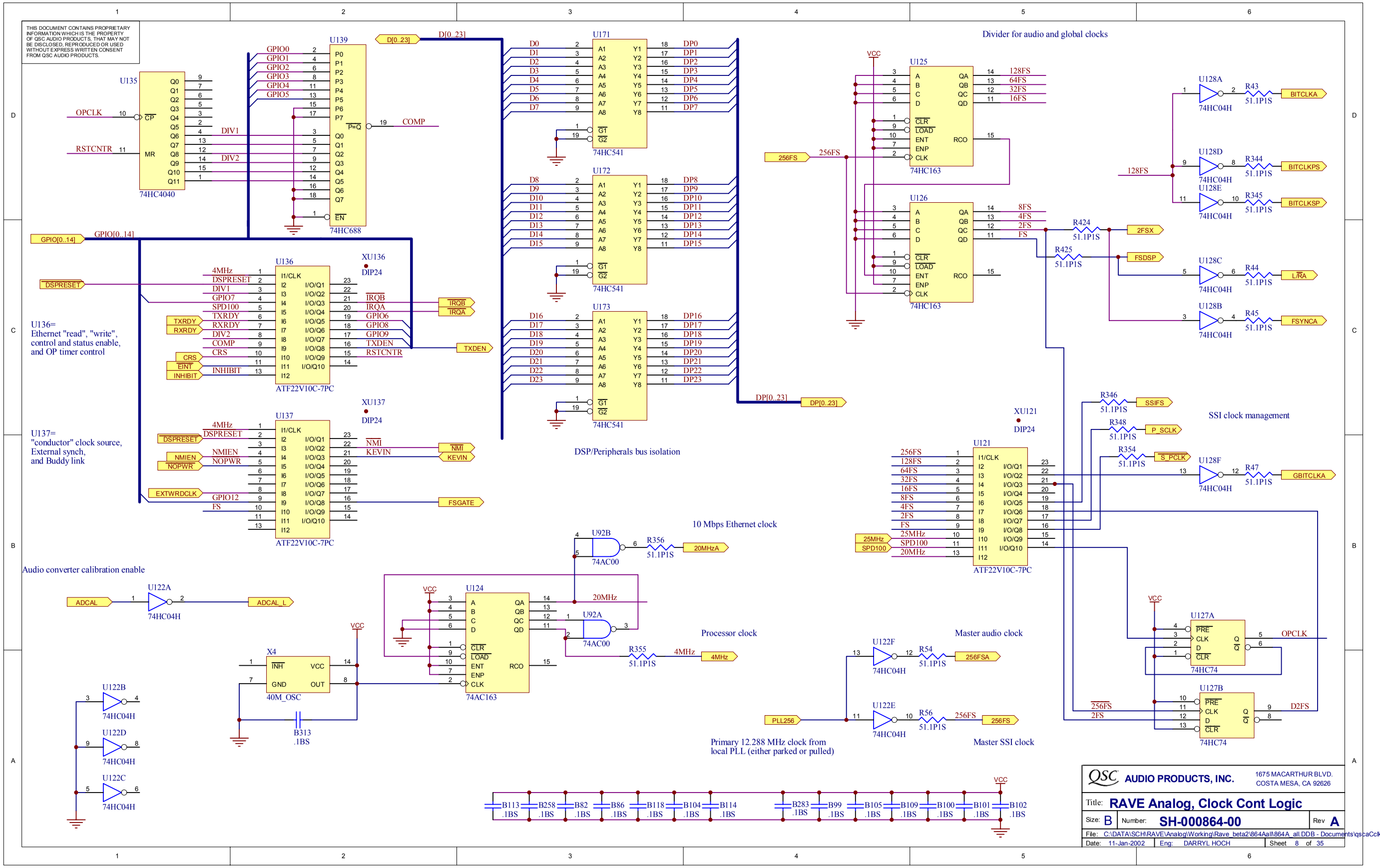
THIS DOCUMENT CONTAINS PROPRIETARY INFORMATION WHICH IS THE PROPERTY OF QSC AUDIO PRODUCTS, THAT MAY NOT BE DISCLOSED, REPRODUCED OR USED WITHOUT EXPRESS WRITTEN CONSENT FROM QSC AUDIO PRODUCTS.
Divider for audio and global clocks
U135
74HC4040
U139
74HC688
U171
74HC541
U172
74HC541
U173
74HC541
DSP/Peripherals bus isolation
U125
74HC163
U126
74HC163
U128A
U128D
U128E
U128C
U128B
U128F
74HC04H
U136
ATF22V10C-7PC
U136=
Ethernet "read", "write",
control and status enable,
and OP timer control
U137
ATF22V10C-7PC
U137=
"conductor" clock source,
External synch,
and Buddy link
U121
ATF22V10C-7PC
SSI clock management
10 Mbps Ethernet clock
U92B
74AC00
U92A
74AC00
U124
74AC163
Processor clock
X4
40M_OSC
Audio converter calibration enable
U122A
U122B
U122C
U122D
U122E
U122F
Master audio clock
Master SSI clock
Primary 12.288 MHz clock from
local PLL (either parked or pulled)
U127A
U127B
74HC74
QSC AUDIO PRODUCTS, INC.
1675 MACARTHUR BLVD.
COSTA MESA, CA 92626
Title: RAVE Analog, Clock Cont Logic
Size: B
Number: SH-000864-00
Rev A
File: C:\DATA\SCH\RAVE\Analog\Working\Rave_beta2\864Aall\864A_all.DDB - Documents\qscaCclk.sch
Date: 11-Jan-2002
Eng: DARRYL HOCH
Sheet 8 of 35

THIS DOCUMENT CONTAINS PROPRIETARY INFORMATION WHICH IS THE PROPERTY OF QSC AUDIO PRODUCTS, THAT MAY NOT BE DISCLOSED, REPRODUCED OR USED WITHOUT EXPRESS WRITTEN CONSENT FROM QSC AUDIO PRODUCTS.

24-bit serial audio from ADCs (U1 and U2) to DSP data bus

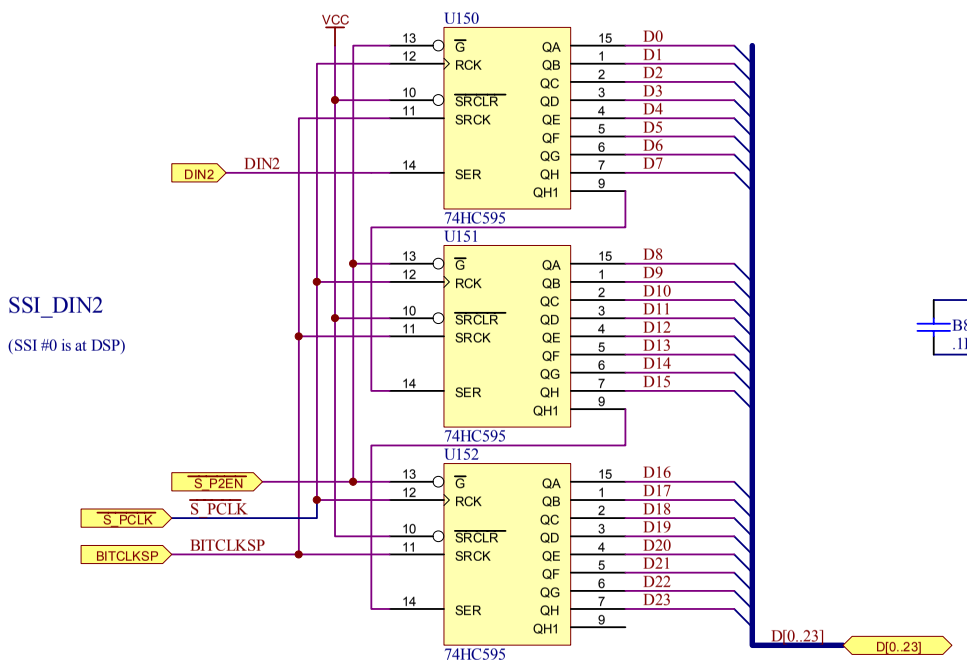

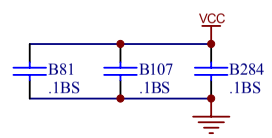

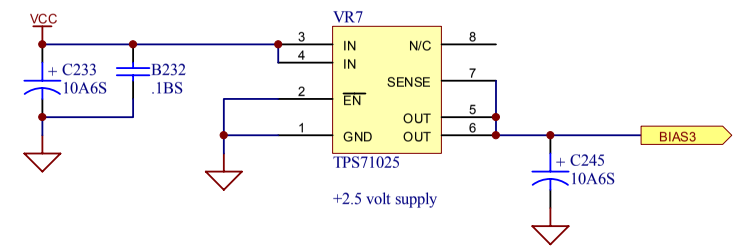

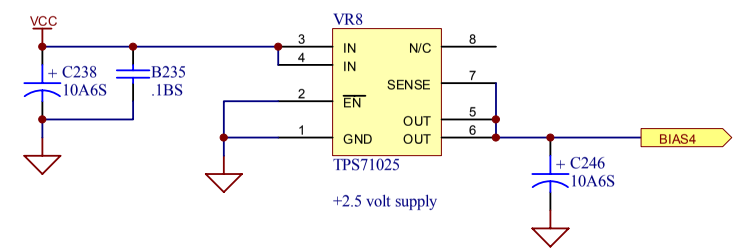

24-bit serial audio from ADCs (U3 and U4) to DSP data bus

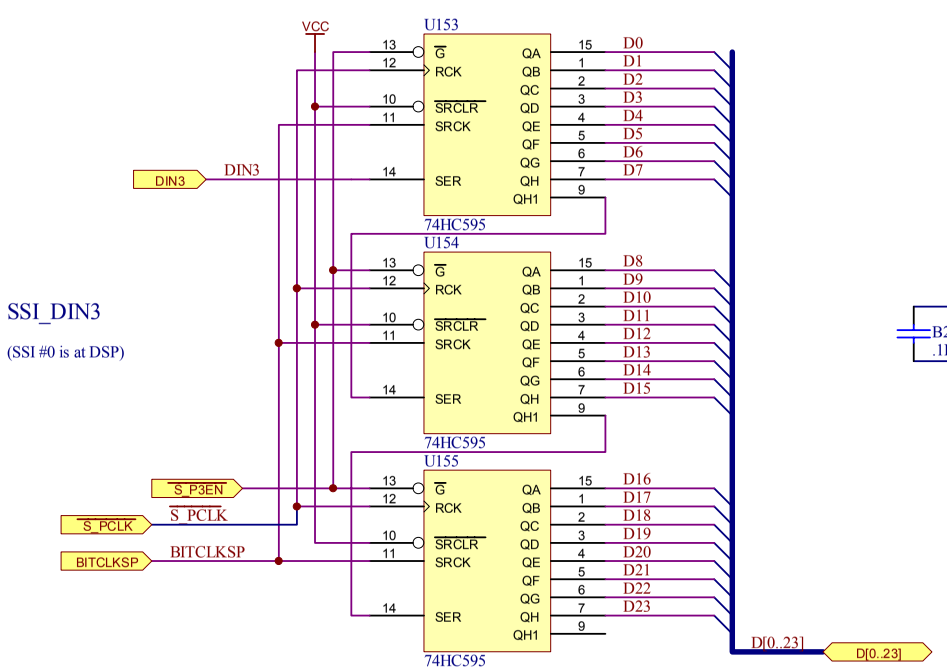

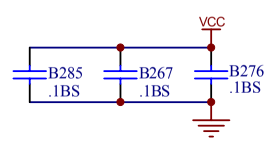

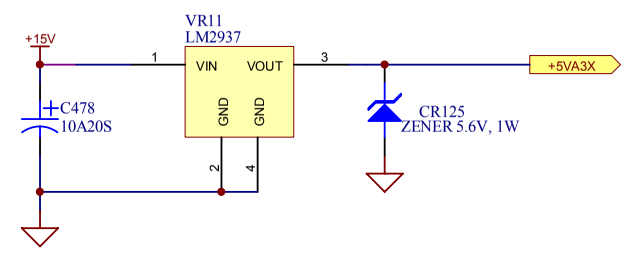

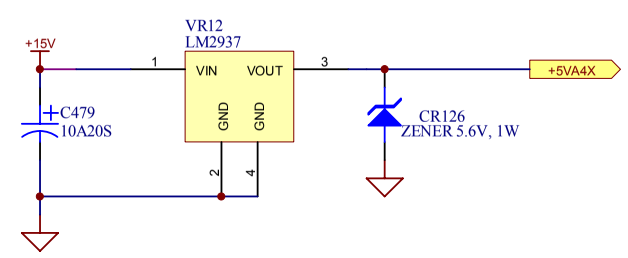

QSC AUDIO PRODUCTS, INC. 1675 MACARTHUR BLVD. COSTA MESA, CA 92626

Title: **RAVE Analog, Input Mux #2 & #3**

Size: B | Number: **SH-000864-00** | Rev **A**

File: C:\DATA\SCH\RAVE\Analog\Working\Rave_beta2\864Aall\864A_all.DDB - Documents\qscaCmi2.sch

Date: 11-Jan-2002 | Eng: DARRYL HOCH | Sheet 9 of 35

THIS DOCUMENT CONTAINS PROPRIETARY INFORMATION WHICH IS THE PROPERTY OF QSC AUDIO PRODUCTS, THAT MAY NOT BE DISCLOSED, REPRODUCED OR USED WITHOUT EXPRESS WRITTEN CONSENT FROM QSC AUDIO PRODUCTS.

PLL DAC, provides controll voltage for VCXO

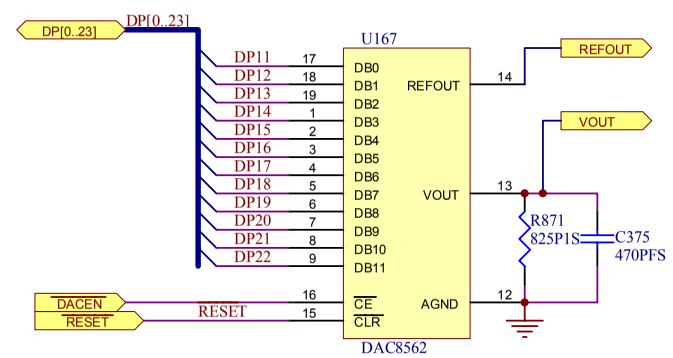

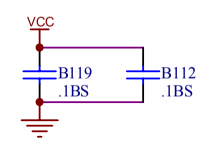

QSC AUDIO PRODUCTS, INC.
1675 MACARTHUR BLVD.
COSTA MESA, CA 92626

Title: RAVE Analog, PLL / VCXO

Size: B | Number: SH-000864-00 | Rev A

File: C:\DATA\SCH\RAVE\Analog\Working\Rave_beta2\864Aall\864A_all.DDB - Documents\qscaCdac.sch

Date: 11-Jan-2002 | Eng: DARRYL HOCH | Sheet 10 of 35

THIS DOCUMENT CONTAINS PROPRIETARY INFORMATION WHICH IS THE PROPERTY OF QSC AUDIO PRODUCTS, THAT MAY NOT BE DISCLOSED, REPRODUCED OR USED WITHOUT EXPRESS WRITTEN CONSENT FROM QSC AUDIO PRODUCTS.

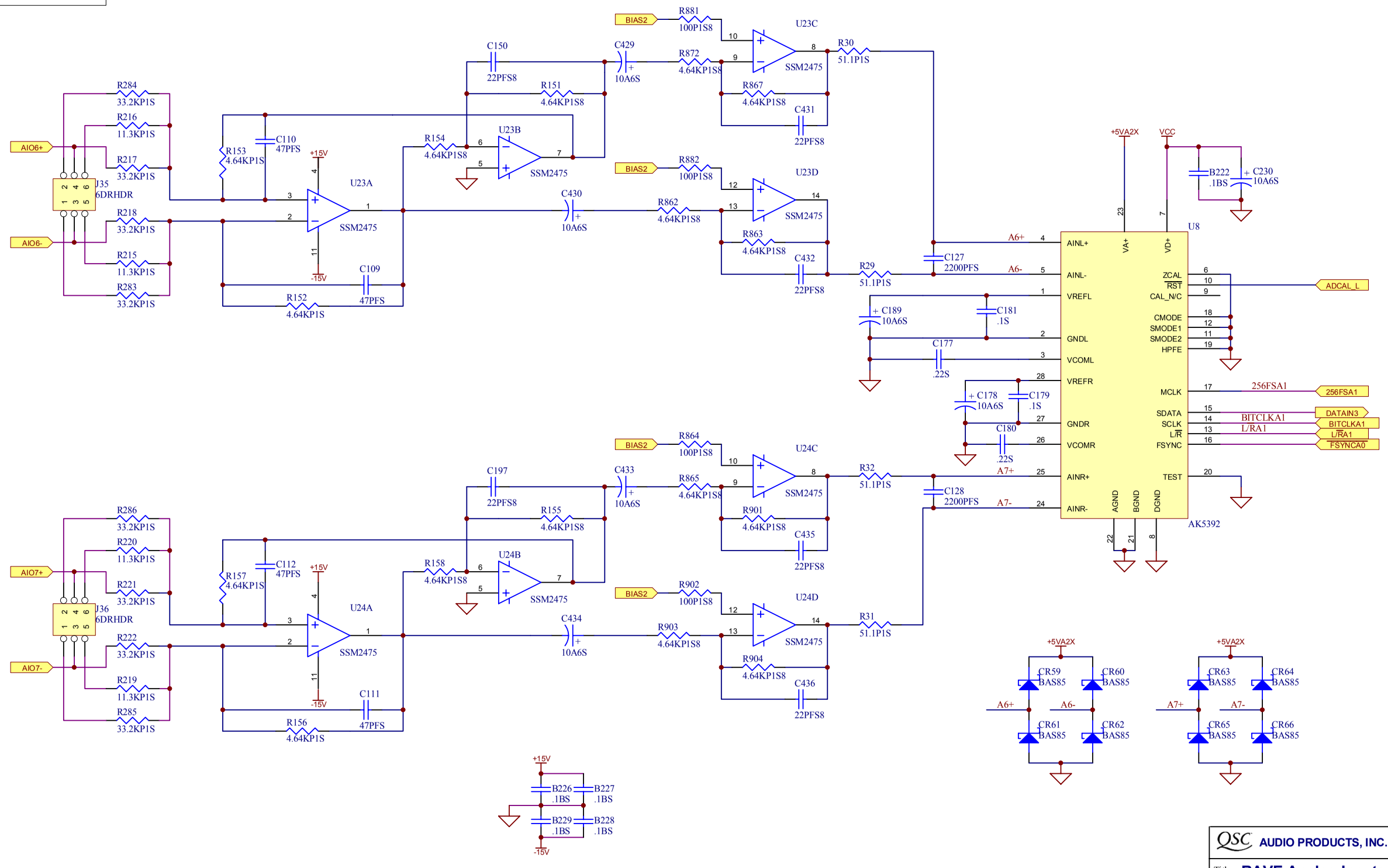

QSC AUDIO PRODUCTS, INC.
1675 MACARTHUR BLVD.
COSTA MESA, CA 92626

Title: **RAVE Analog Inputs # 6-7**

Size: B | Number: **SH-000864-00** | Rev **A**

File: C:\DATA\SCH\RAVE\Analog\Working\Rave_beta2\864Aall\864A_all.DDB - Documents\qscaCai3.sch

Date: 11-Jan-2002 | Eng: DARRYL HOCH | Sheet 13 of 35

THIS DOCUMENT CONTAINS PROPRIETARY INFORMATION WHICH IS THE PROPERTY OF QSC AUDIO PRODUCTS, THAT MAY NOT BE DISCLOSED, REPRODUCED OR USED WITHOUT EXPRESS WRITTEN CONSENT FROM QSC AUDIO PRODUCTS.

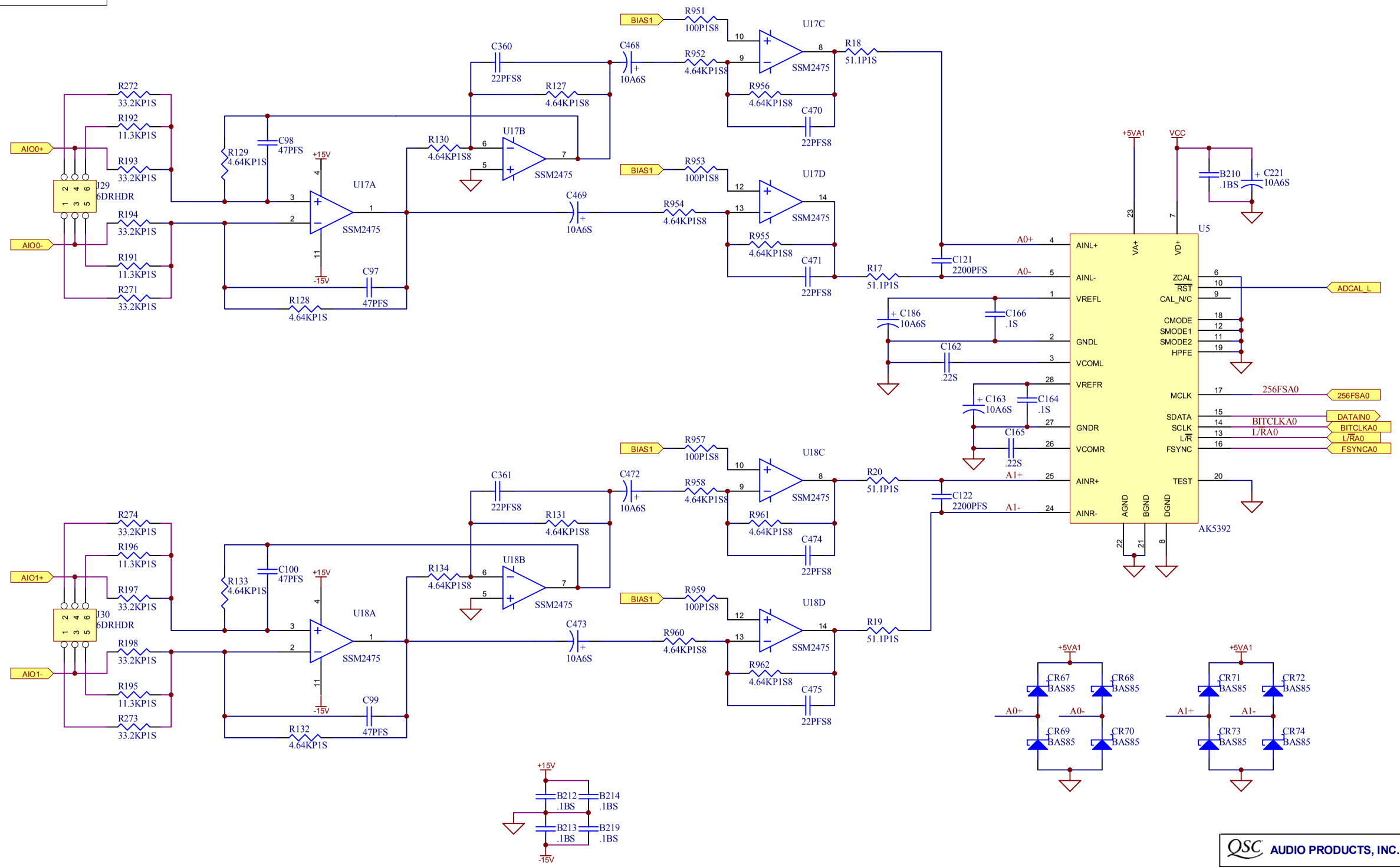

QSC AUDIO PRODUCTS, INC.
1675 MACARTHUR BLVD.
COSTA MESA, CA 92626

Title: **RAVE Analog Inputs # 0-1**

Size: B | Number: **SH-000864-00** | Rev **A**

File: C:\DATA\SCH\RAVE\Analog\Working\Rave_beta2\864Aall\864A_all.DDB - Documents\qscaCai0.sch

Date: 11-Jan-2002 | Eng: DARRYL HOCH | Sheet 14 of 35

THIS DOCUMENT CONTAINS PROPRIETARY INFORMATION WHICH IS THE PROPERTY OF QSC AUDIO PRODUCTS, THAT MAY NOT BE DISCLOSED, REPRODUCED OR USED WITHOUT EXPRESS WRITTEN CONSENT FROM QSC AUDIO PRODUCTS.

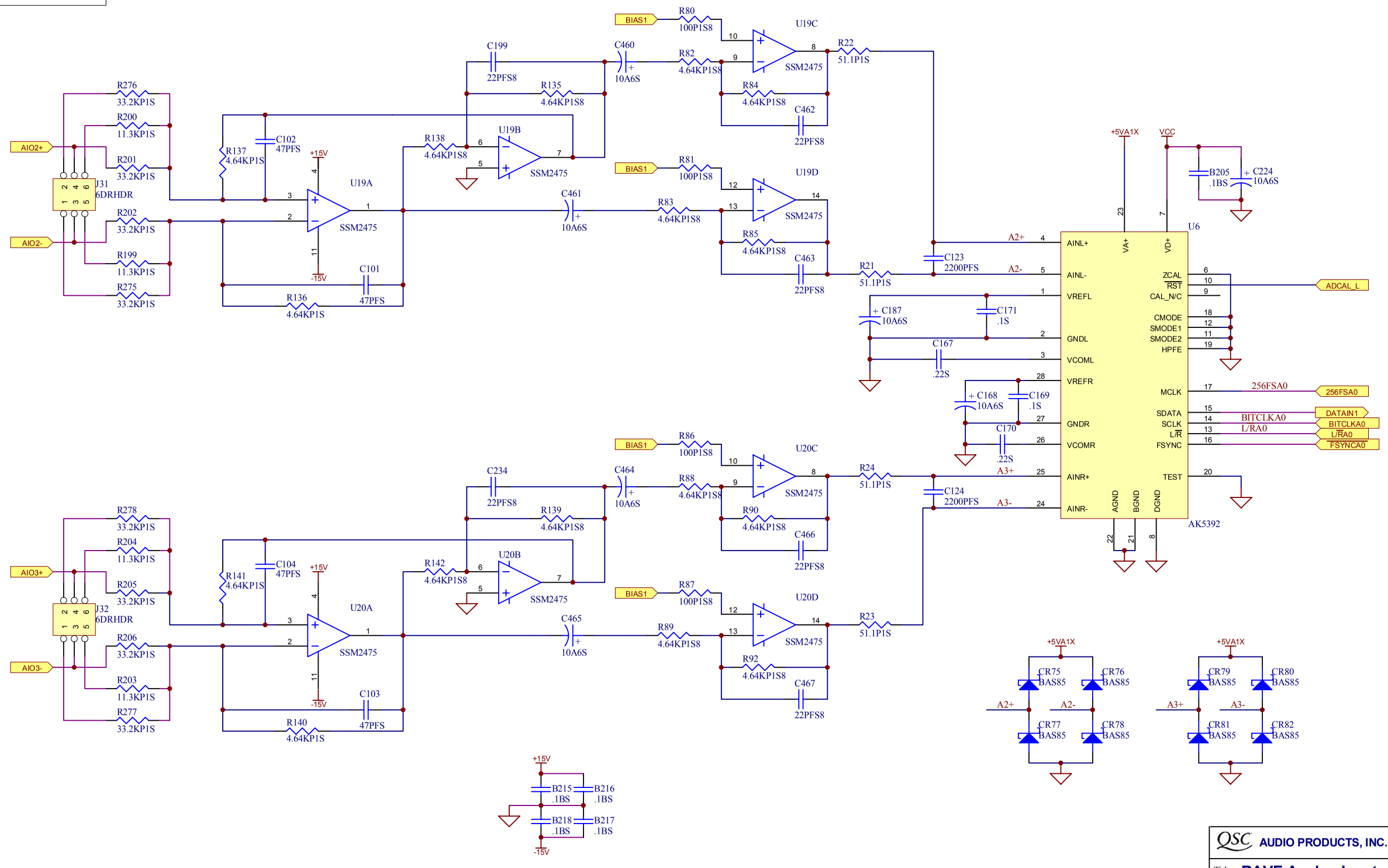

QSC AUDIO PRODUCTS, INC.
1675 MACARTHUR BLVD.
COSTA MESA, CA 92626

Title: **RAVE Analog Inputs # 2-3**

Size: B | Number: **SH-000864-00** | Rev **A**

File: C:\DATA\SCH\RAVE\Analog\Working\Rave_beta2\864Aall\864A_all.DDB - Documents\qscaCai1.sch

Date: 11-Jan-2002 | Eng: DARRYL HOCH | Sheet 15 of 35

THIS DOCUMENT CONTAINS PROPRIETARY INFORMATION WHICH IS THE PROPERTY OF QSC AUDIO PRODUCTS, THAT MAY NOT BE DISCLOSED, REPRODUCED OR USED WITHOUT EXPRESS WRITTEN CONSENT FROM QSC AUDIO PRODUCTS.

Metering LED drivers

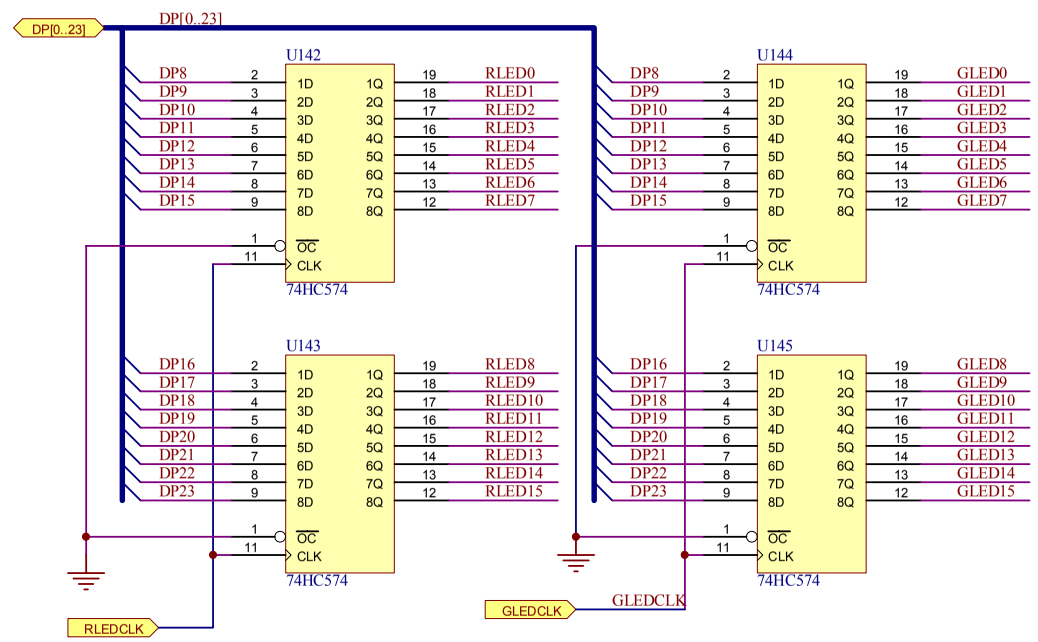

"Power"

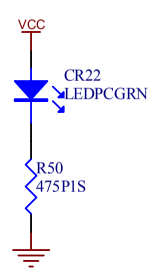

CobraNet status indicators (front panel)

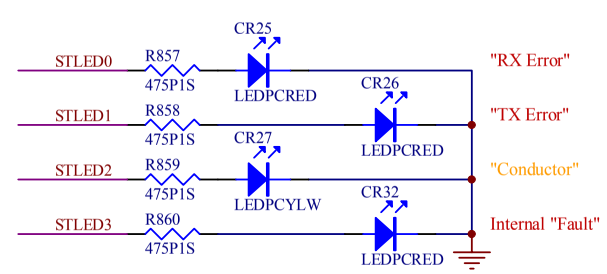

Status LED drivers and DAC functions (relay and mute control)

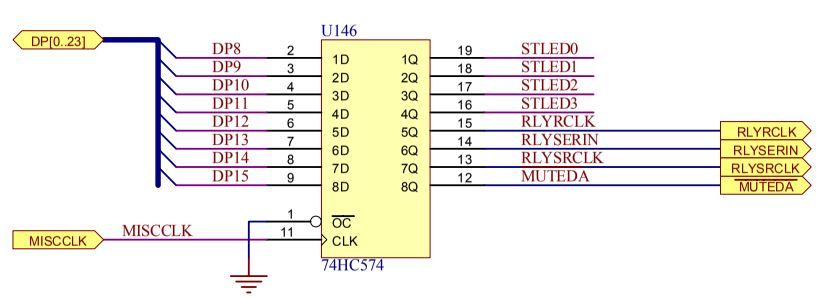

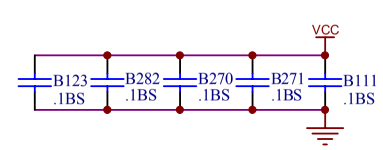

Metering, error code and version display LEDs (tri-color)

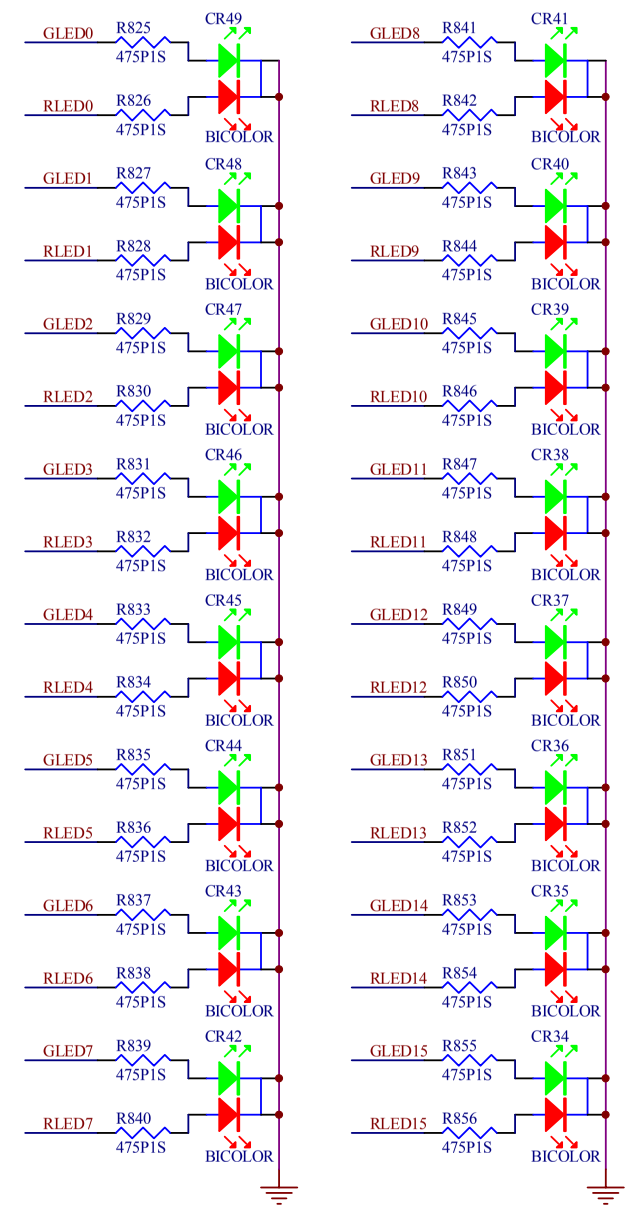

QSC AUDIO PRODUCTS, INC.	1675 MACARTHUR BLVD. COSTA MESA, CA 92626
Title:	RAVE Analog, LED & Relay Logic
Size: B	Number: SH-000864-00 Rev A
File:	C:\DATA\SCH\RAVE\Analog\Working\Rave_beta2\864Aall\864A_all.DDB - Documents\qscaCled.sch
Date: 11-Jan-2002	Eng: DARRYL HOCH Sheet 16 of 35

THIS DOCUMENT CONTAINS PROPRIETARY INFORMATION WHICH IS THE PROPERTY OF QSC AUDIO PRODUCTS, THAT MAY NOT BE DISCLOSED, REPRODUCED OR USED WITHOUT EXPRESS WRITTEN CONSENT FROM QSC AUDIO PRODUCTS.

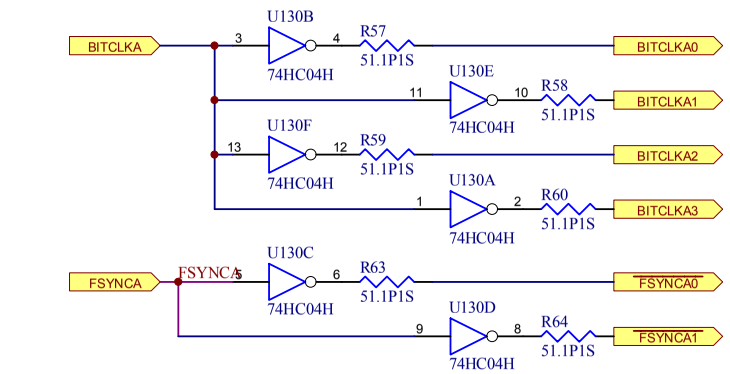

Independent "bit clocks" for audio converters
(128FS)

Inverted "frame synch" control for multiplexing two converters onto each SSI stream
(2FS)

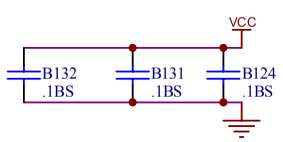

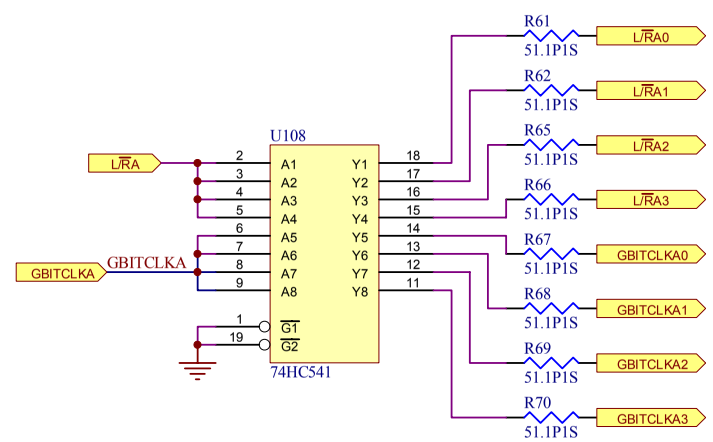

Independent "L/R" clocks for audio converters
(FS)

Independent gated "bit clocks" for even numbered DACs
(128FS)

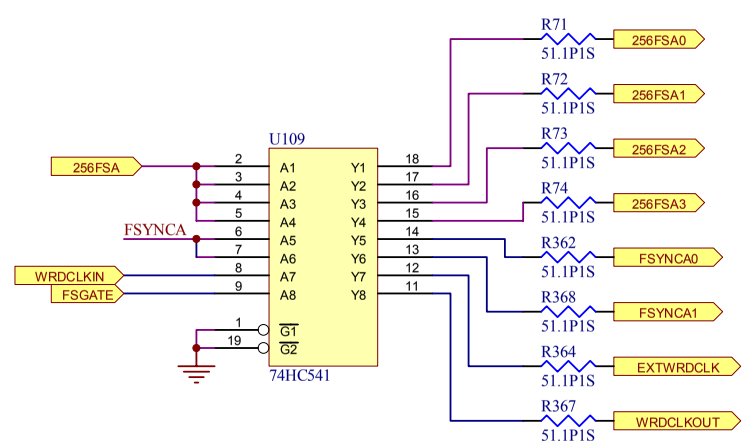

Independent "master" clocks for audio converters
(256FS)

"Frame synch" control for multiplexing two converters onto each SSI stream
(2FS)

External word clock from BNC input
(750 Hz to FS)

Word clock to drive BNC output (Buddy Link and synchronization driver)
(FS)

QSC AUDIO PRODUCTS, INC.
1675 MACARTHUR BLVD.
COSTA MESA, CA 92626

Title: **RAVE Analog I\O Signal Drivers**

Size: B | Number: **SH-000864-00** | Rev **A**

File: C:\DATA\SCH\RAVE\Analog\Working\Rave_beta2\864Aall\864A_all.DDB - Documents\qscaCalg.sch

Date: 11-Jan-2002 | Eng: DARRYL HOCH | Sheet 17 of 35

THIS DOCUMENT CONTAINS PROPRIETARY INFORMATION WHICH IS THE PROPERTY OF QSC AUDIO PRODUCTS, THAT MAY NOT BE DISCLOSED, REPRODUCED OR USED WITHOUT EXPRESS WRITTEN CONSENT FROM QSC AUDIO PRODUCTS.

24-bit serial audio from ADCs (U7 and U8) to DSP data bus

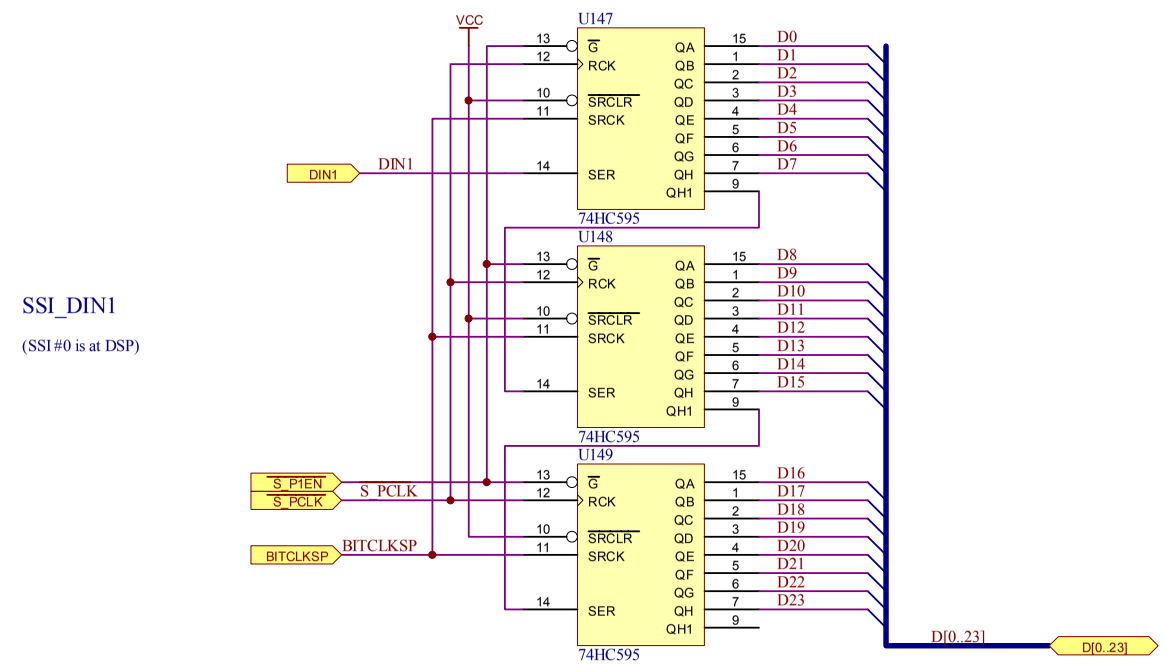

SSI_DIN1

(SSI #0 is at DSP)

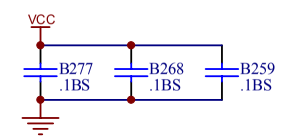

Serial data (SDATA) outputs from ADCs

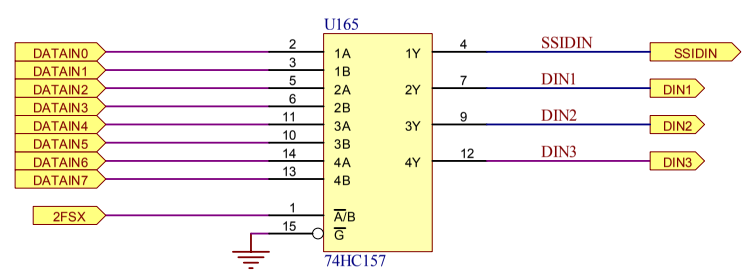

SSI data in streams (0..3)

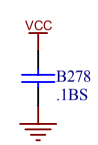

QSC AUDIO PRODUCTS, INC. 1675 MACARTHUR BLVD. COSTA MESA, CA 92626

Title: RAVE Analog Input Multiplexer #0

Size: B | Number: SH-000864-00 | Rev A

File: C:\DATA\SCH\RAVE\Analog\Working\Rave_beta2\864Aall\864A_all.DDB - Documents\qscaCmux.sch

Date: 11-Jan-2002 | Eng: DARRYL HOCH | Sheet 18 of 35

THIS DOCUMENT CONTAINS PROPRIETARY INFORMATION WHICH IS THE PROPERTY OF QSC AUDIO PRODUCTS, THAT MAY NOT BE DISCLOSED, REPRODUCED OR USED WITHOUT EXPRESS WRITTEN CONSENT FROM QSC AUDIO PRODUCTS.

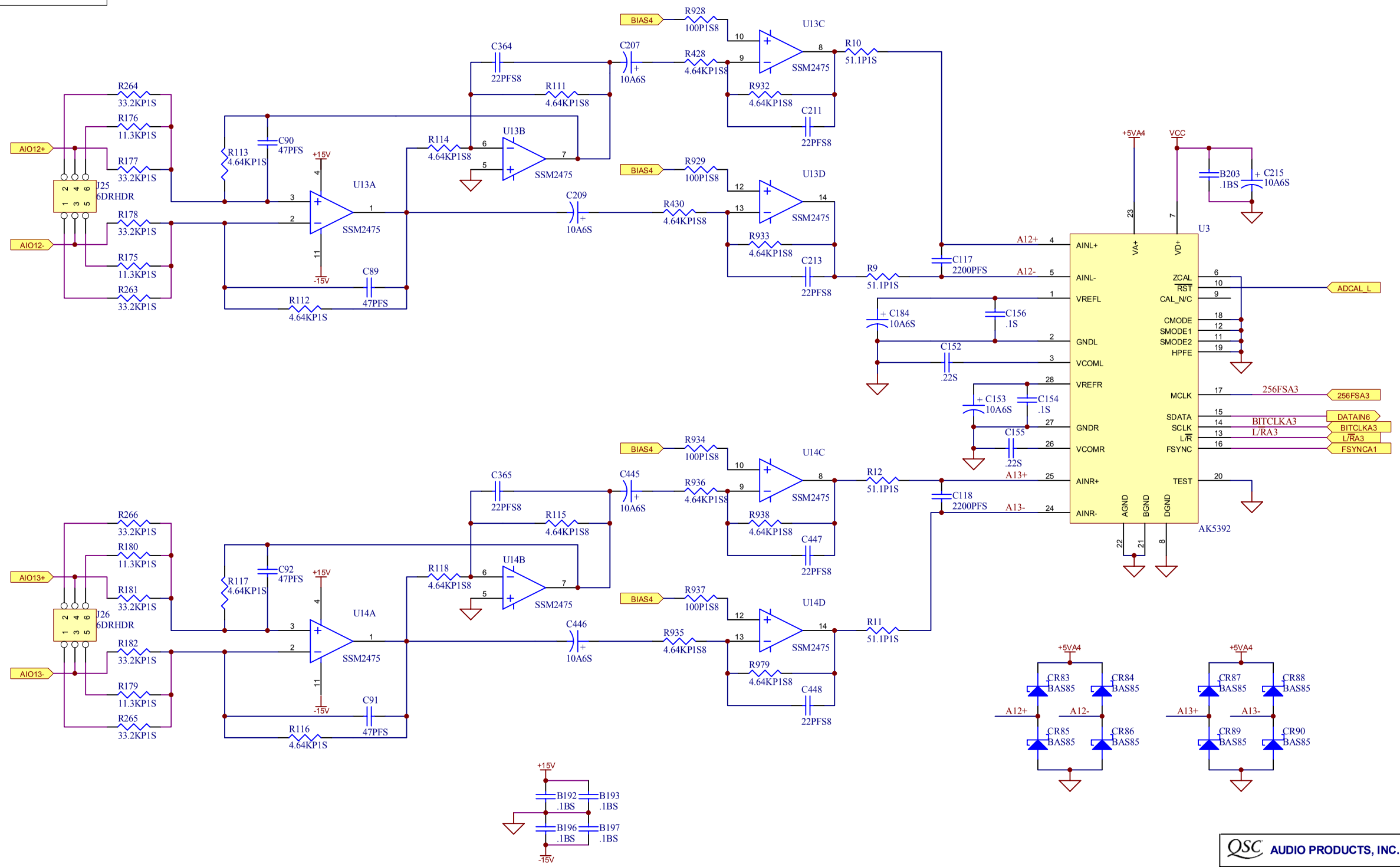

QSC AUDIO PRODUCTS, INC.
1675 MACARTHUR BLVD.
COSTA MESA, CA 92626

Title: **RAVE Analog Inputs # 12-13**

Size: B | Number: **SH-000864-00** | Rev **A**

File: C:\DATA\SCH\RAVE\Analog\Working\Rave_beta2\864Aall\864A_all.DDB - Documents\qscaCai6.sch

Date: 11-Jan-2002 | Eng: DARRYL HOCH | Sheet 19 of 35

THIS DOCUMENT CONTAINS PROPRIETARY INFORMATION WHICH IS THE PROPERTY OF QSC AUDIO PRODUCTS, THAT MAY NOT BE DISCLOSED, REPRODUCED OR USED WITHOUT EXPRESS WRITTEN CONSENT FROM QSC AUDIO PRODUCTS.

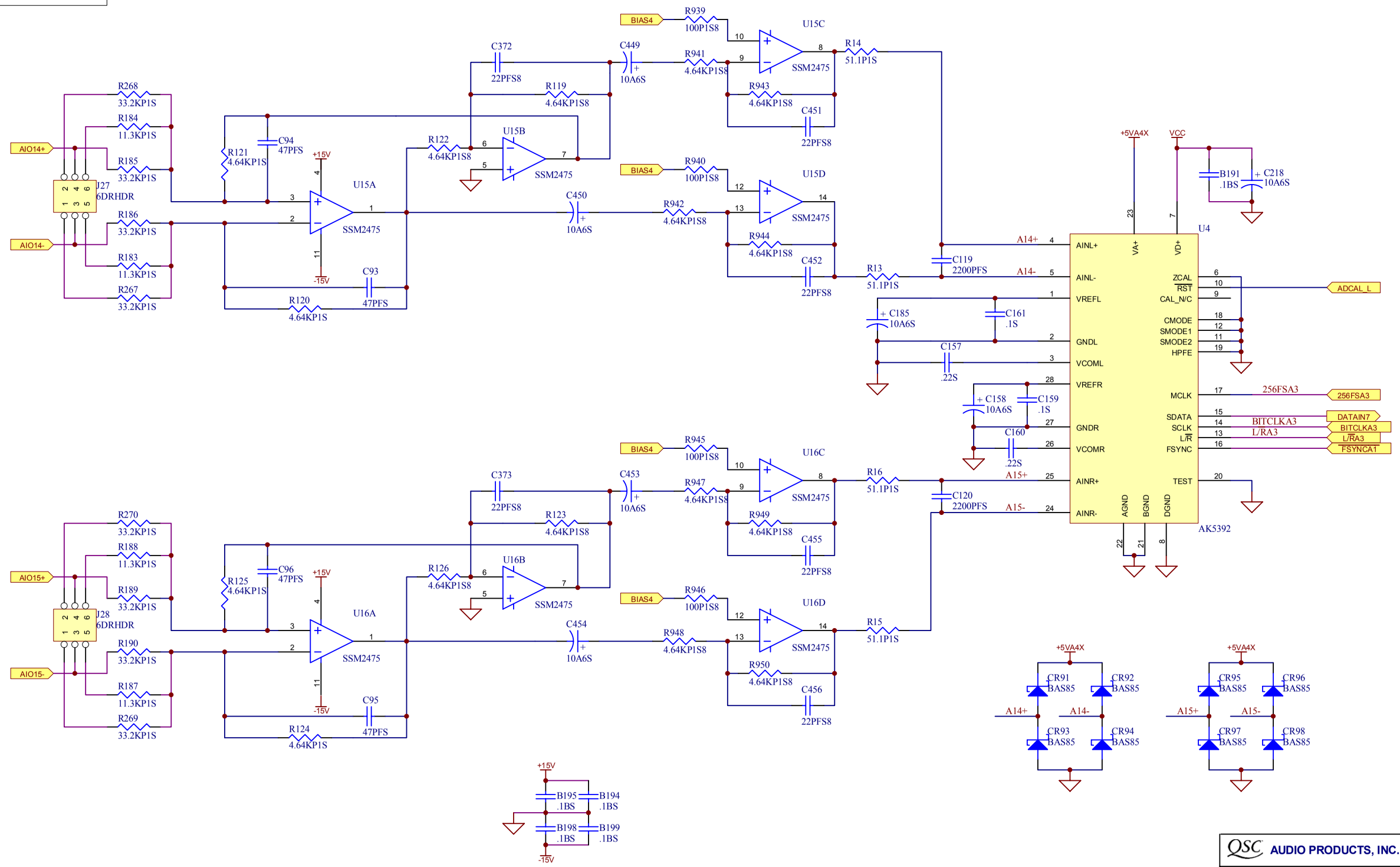

QSC AUDIO PRODUCTS, INC.
1675 MACARTHUR BLVD.
COSTA MESA, CA 92626

Title: **RAVE Analog Inputs # 14-15**

Size: B | Number: **SH-000864-00** | Rev **A**

File: C:\DATA\SCH\RAVE\Analog\Working\Rave_beta2\864Aall\864A_all.DDB - Documents\qscaCai7.sch

Date: 11-Jan-2002 | Eng: DARRYL HOCH | Sheet 20 of 35

THIS DOCUMENT CONTAINS PROPRIETARY INFORMATION WHICH IS THE PROPERTY OF QSC AUDIO PRODUCTS, THAT MAY NOT BE DISCLOSED, REPRODUCED OR USED WITHOUT EXPRESS WRITTEN CONSENT FROM QSC AUDIO PRODUCTS.

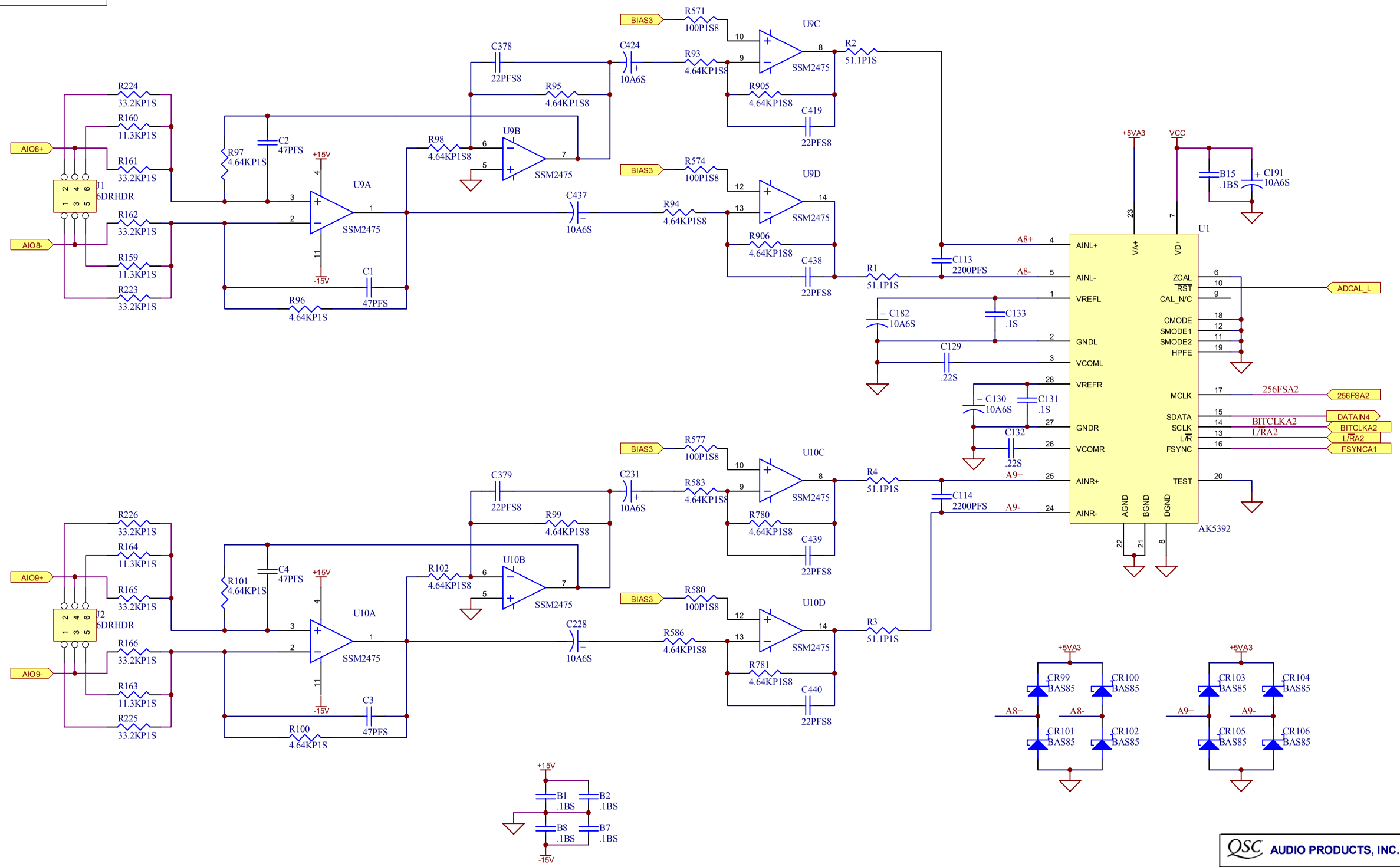

QSC AUDIO PRODUCTS, INC.
1675 MACARTHUR BLVD.
COSTA MESA, CA 92626

Title: **RAVE Analog Inputs # 8-9**

Size: B | Number: **SH-000864-00** | Rev **A**

File: C:\DATA\SCH\RAVE\Analog\Working\Rave_beta2\864Aall\864A_all.DDB - Documents\qscaCai4.sch

Date: 11-Jan-2002 | Eng: DARRYL HOCH | Sheet 21 of 35

THIS DOCUMENT CONTAINS PROPRIETARY INFORMATION WHICH IS THE PROPERTY OF QSC AUDIO PRODUCTS, THAT MAY NOT BE DISCLOSED, REPRODUCED OR USED WITHOUT EXPRESS WRITTEN CONSENT FROM QSC AUDIO PRODUCTS.

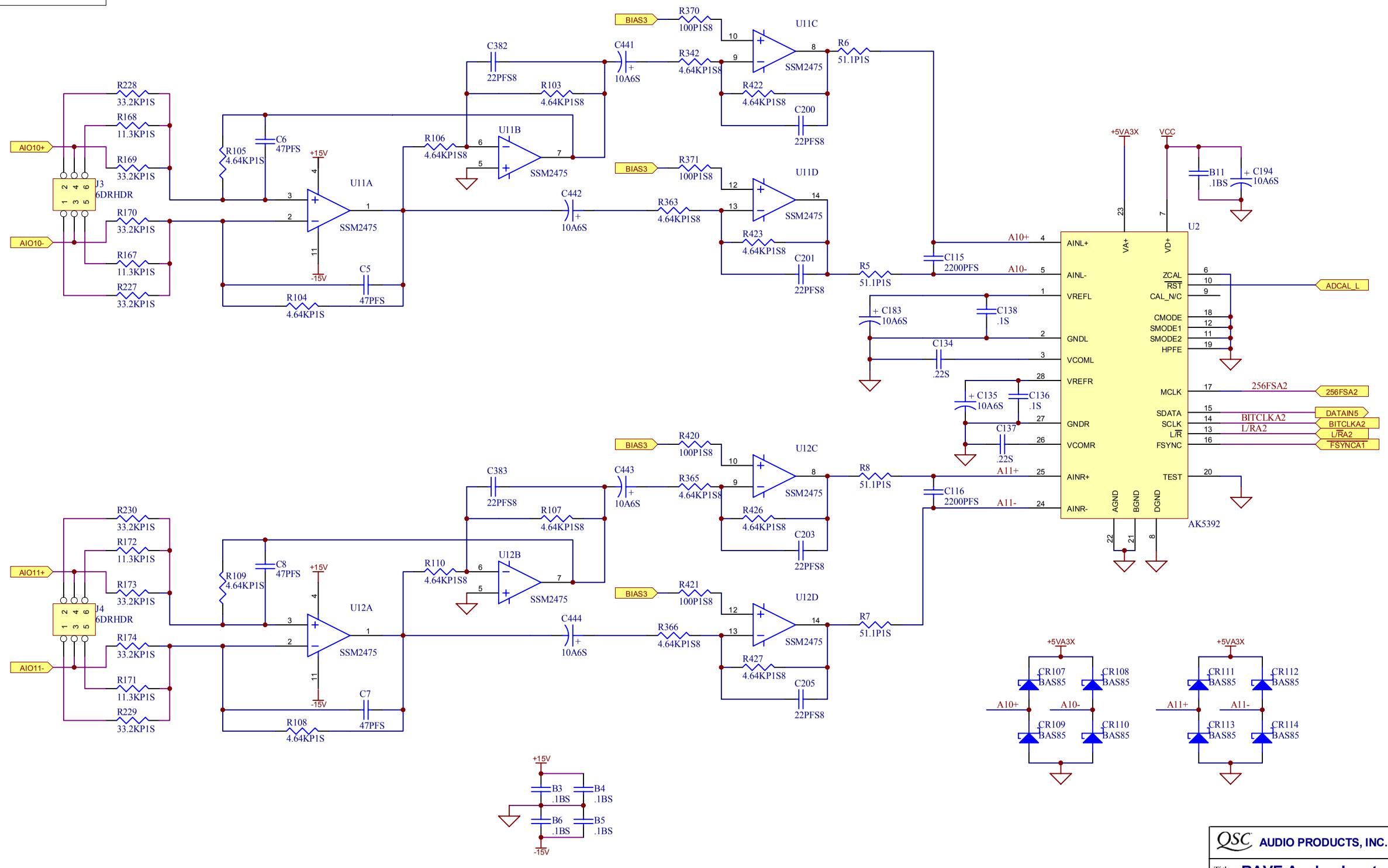

QSC AUDIO PRODUCTS, INC.
1675 MACARTHUR BLVD.
COSTA MESA, CA 92626

Title: **RAVE Analog Inputs # 10-11**

Size: B | Number: **SH-000864-00** | Rev **A**

File: C:\DATA\SCH\RAVE\Analog\Working\Rave_beta2\864Aall\864A_all.DDB - Documents\qscaCai5.sch

Date: 11-Jan-2002 | Eng: DARRYL HOCH | Sheet 22 of 35

THIS DOCUMENT CONTAINS PROPRIETARY INFORMATION WHICH IS THE PROPERTY OF QSC AUDIO PRODUCTS, THAT MAY NOT BE DISCLOSED, REPRODUCED OR USED WITHOUT EXPRESS WRITTEN CONSENT FROM QSC AUDIO PRODUCTS.

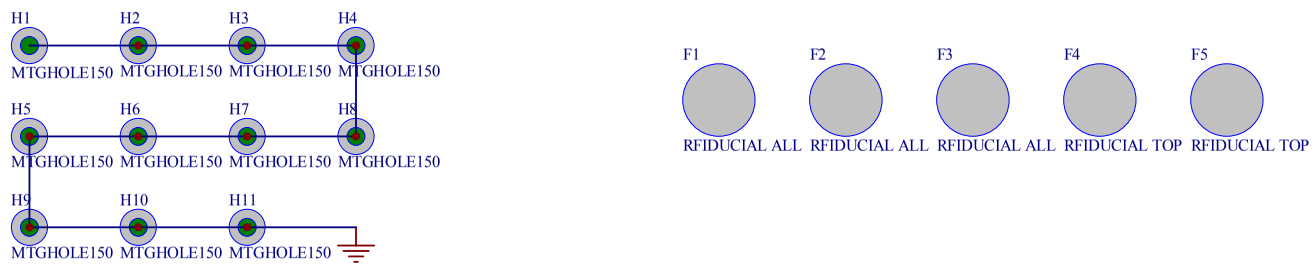

QSC AUDIO PRODUCTS, INC.
1675 MACARTHUR BLVD.
COSTA MESA, CA 92626

Title: **RAVE Analog, Mech & Spare Cmpnt**

Size: B | Number: **SH-00864-00** | Rev **A**

File: C:\DATA\SCH\RAVE\Analog\Working\Rave_beta2\864Aall\864A_all.DDB - Documents\qscaCmec.sch

Date: 11-Jan-2002 | Eng: DARRYL HOCH | Sheet 29 of 35

THIS DOCUMENT CONTAINS PROPRIETARY INFORMATION WHICH IS THE PROPERTY OF QSC AUDIO PRODUCTS, THAT MAY NOT BE DISCLOSED, REPRODUCED OR USED WITHOUT EXPRESS WRITTEN CONSENT FROM QSC AUDIO PRODUCTS.

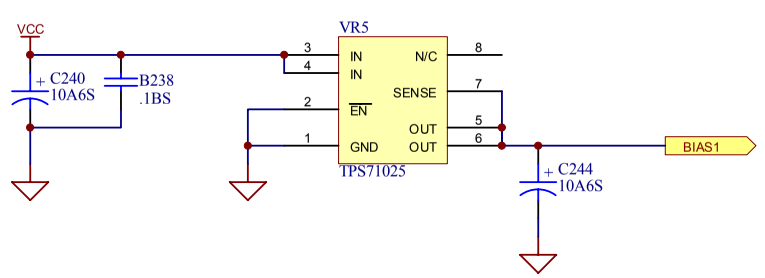

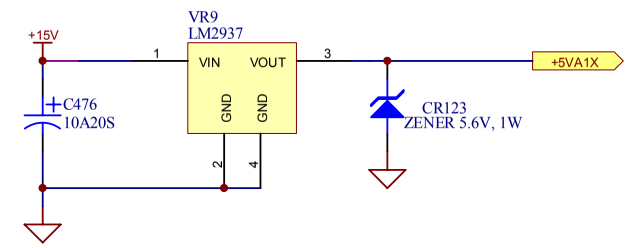

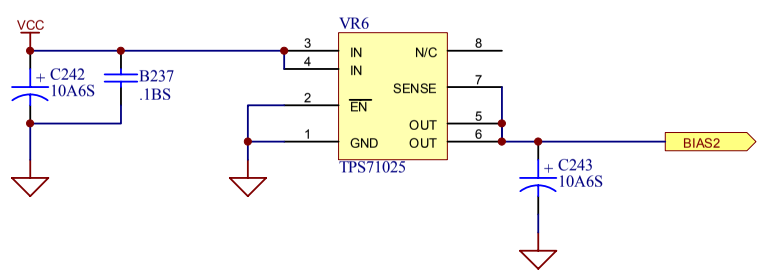

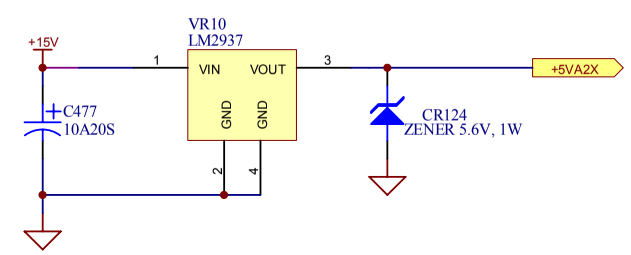

SSI swap for RAVE 188s-24
(Channel 1 output goes to PCB output 9)

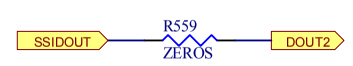

SSI swap for RAVE 188s-24
(Channel 5 output goes to PCB output 13)

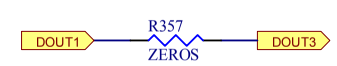

QSC AUDIO PRODUCTS, INC.
1675 MACARTHUR BLVD.
COSTA MESA, CA 92626

Title: RAVE Analog, +2.5V Voltage Reg

Size: B | Number: SH-000864-00 | Rev A

File: C:\DATA\SCH\RAVE\Analog\Working\Rave_beta2\864Aall\864A_all.DDB - Documents\qscaCvr2.sch

Date: 11-Jan-2002 | Eng: DARRYL HOCH | Sheet 32 of 35

THIS DOCUMENT CONTAINS PROPRIETARY INFORMATION WHICH IS THE PROPERTY OF QSC AUDIO PRODUCTS, THAT MAY NOT BE DISCLOSED, REPRODUCED OR USED WITHOUT EXPRESS WRITTEN CONSENT FROM QSC AUDIO PRODUCTS.

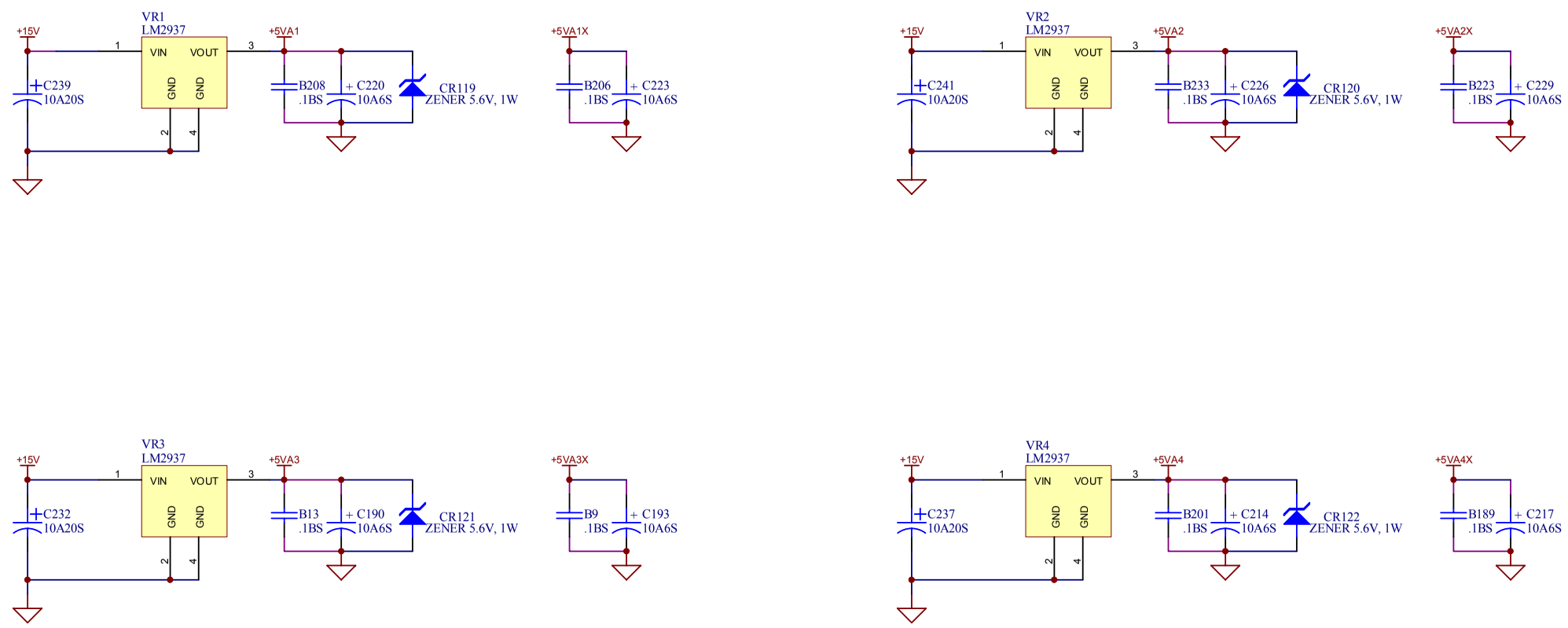

QSC AUDIO PRODUCTS, INC.
1675 MACARTHUR BLVD.
COSTA MESA, CA 92626

Title: **RAVE Analog, +5V Voltage Reg**

Size: B | Number: **SH-000864-00** | Rev **A**

File: C:\DATA\SCH\RAVE\Analog\Working\Rave_beta2\864Aall\864A_all.DDB - Documents\qscaCvrp.sch

Date: 11-Jan-2002 | Eng: DARRYL HOCH | Sheet 33 of 35

THIS DOCUMENT CONTAINS PROPRIETARY INFORMATION WHICH IS THE PROPERTY OF QSC AUDIO PRODUCTS, THAT MAY NOT BE DISCLOSED, REPRODUCED OR USED WITHOUT EXPRESS WRITTEN CONSENT FROM QSC AUDIO PRODUCTS.

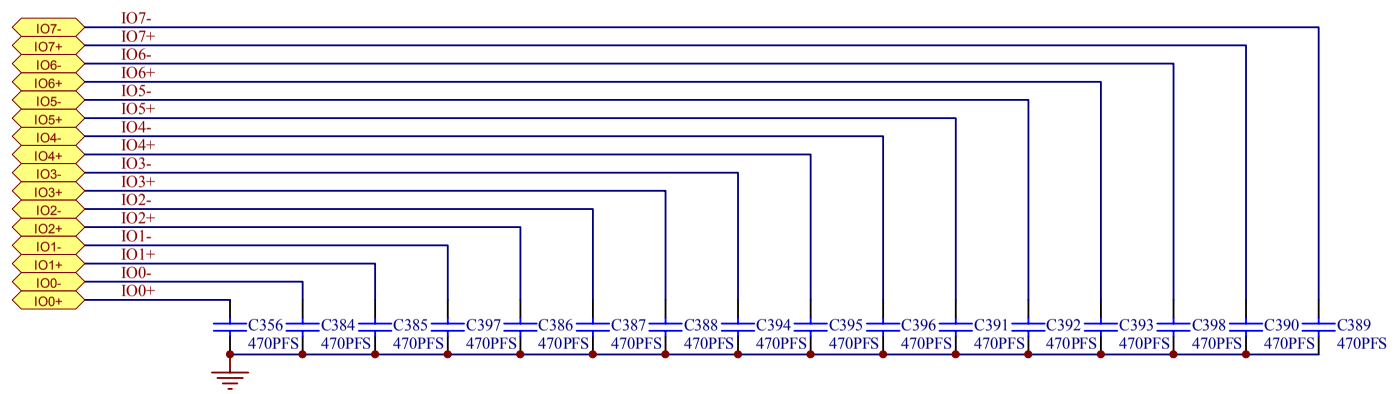

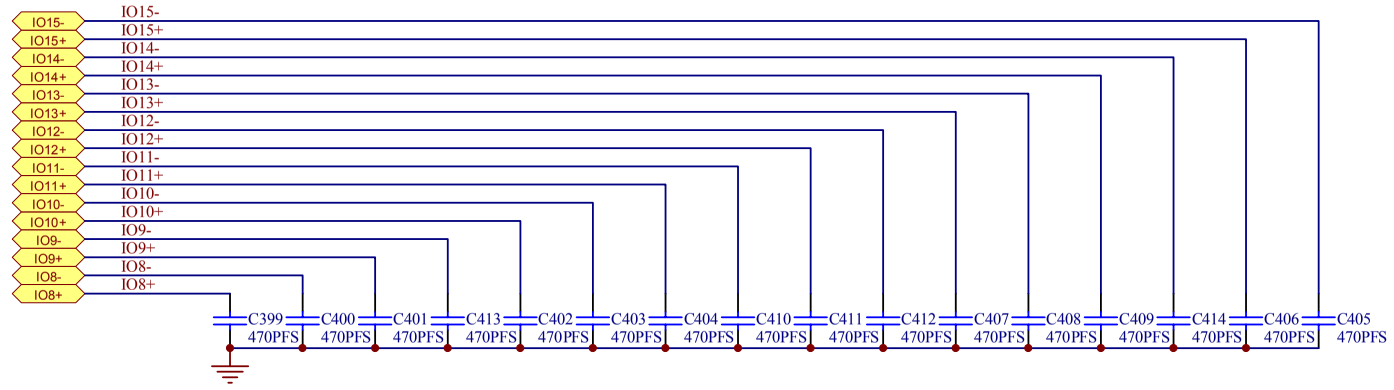

QSC AUDIO PRODUCTS, INC.
1675 MACARTHUR BLVD.
COSTA MESA, CA 92626

Title: **RAVE Analog, 161 input caps**

Size: B | Number: **SH-000864-00** | Rev **A**

File: C:\DATA\SCH\RAVE\Analog\Working\Rave_beta2\864Aall\864A_all.DDB - Documents\qscaCcp1.sch

Date: 11-Jan-2002 | Eng: DARRYL HOCH | Sheet 34 of 35

THIS DOCUMENT CONTAINS PROPRIETARY INFORMATION WHICH IS THE PROPERTY OF QSC AUDIO PRODUCTS, THAT MAY NOT BE DISCLOSED, REPRODUCED OR USED WITHOUT EXPRESS WRITTEN CONSENT FROM QSC AUDIO PRODUCTS.

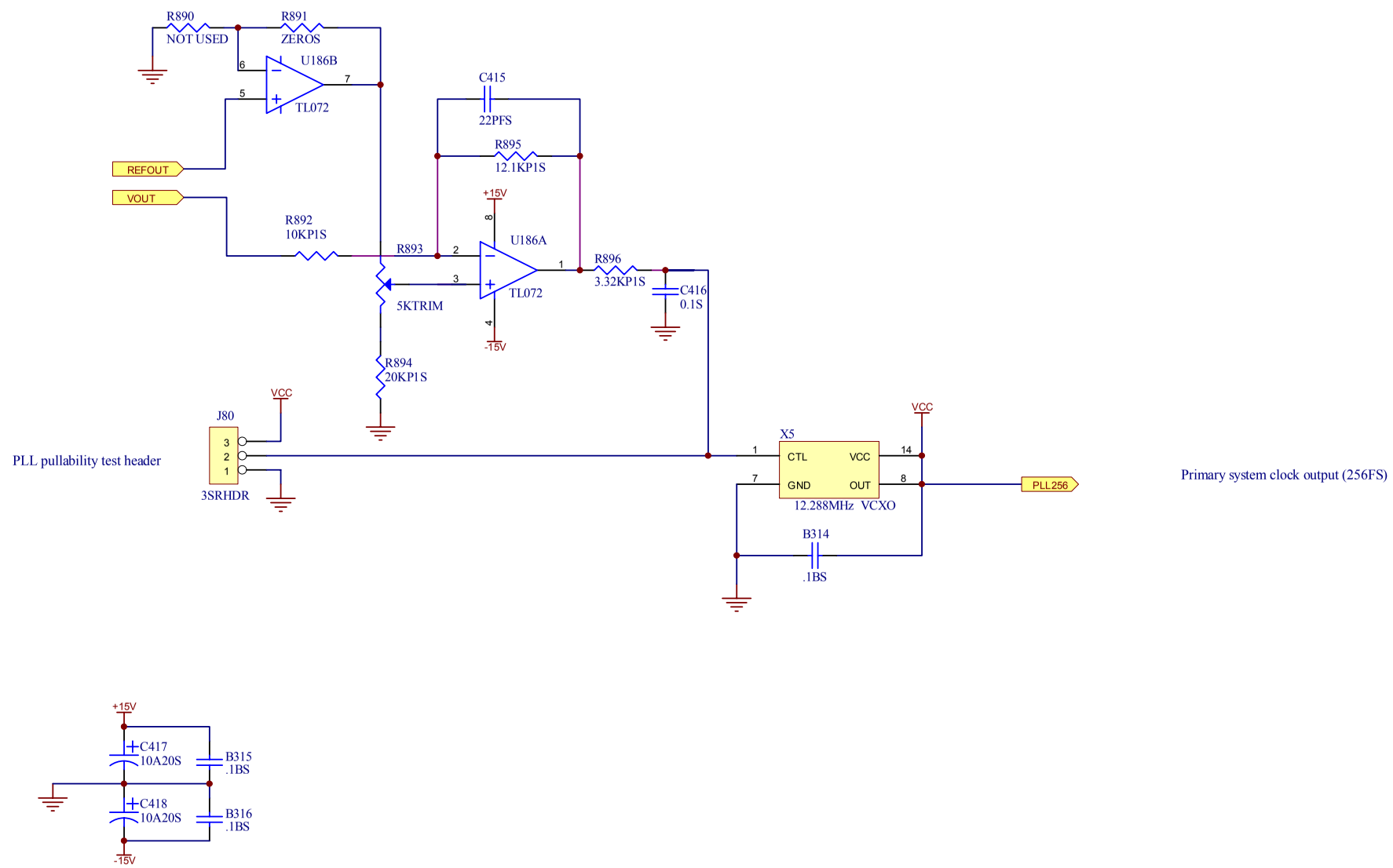

QSC AUDIO PRODUCTS, INC.
1675 MACARTHUR BLVD.
COSTA MESA, CA 92626

Title: **RAVE Analog PLL / VCXO**

Size: B | Number: **SH-000864-00** | Rev **A**

File: C:\DATA\SCH\RAVE\Analog\Working\Rave_beta2\864Aall\864A_all.DDB - Documents\qscaCpll.sch

Date: 11-Jan-2002 | Eng: DARRYL HOCH | Sheet 35 of 35